MODERN FREQUENCY SYNTHESIZERS

Andy Talbot G4JNT

RSGB Convention 2014

A Synthesizer is a very powerful machine,

It can generate all frequencies once,

And most of them twice,

Simultaneously.

(G3RZP, sometime in the 1980's)

The Basic Integer- N Synth

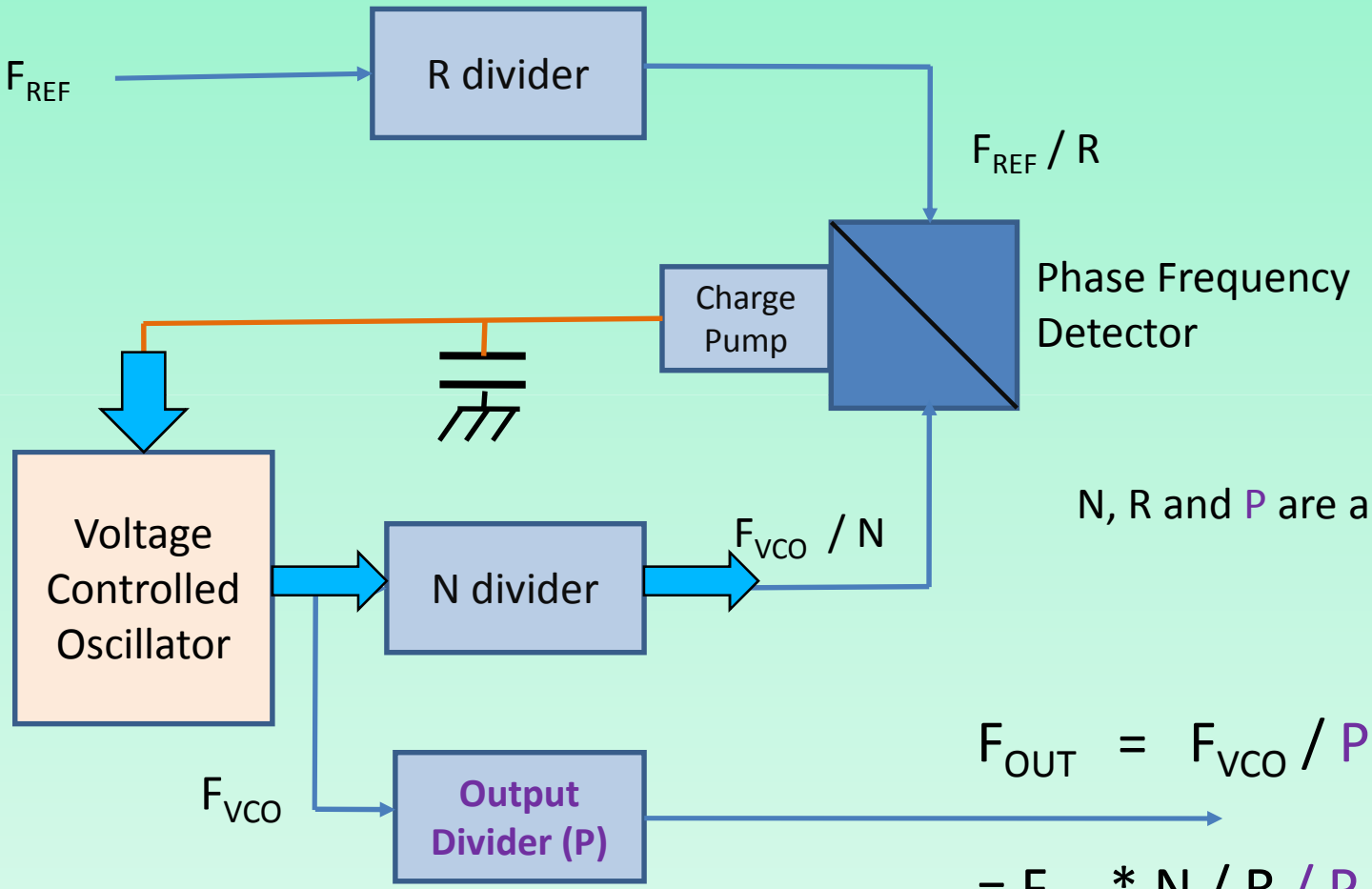

N, R and P are all Integers

$$F_{OUT} = F_{VCO} / P$$

$$= F_{REF} * N / R / P$$

- **Tuning Grid in steps of F_{COMP} / P**
- **Loop time constant / bandwidth, spurii all depend on F_{COMP} <u>which is defined by the Step Size</u>**

- **Useful for**
  - **Fixed sources eg. transverter LOs**
  - **Channelised operation**
  - **Multiplier from a variable input , eg. DDS, VFO**
- **$F_{OUT} = F_{IN} * N / R / P$: Non-integer Freq multiplier**

Phase Noise

- The Performance Limiter

- Generated as the loop continually adjusts itself
  - Several Sources
- Noise appears as FM / phase jitter on the carrier.
  - INSIDE the Loop Bandwidth it is determined by the REFERENCE alone
  - OUTSIDE the Loop Bandwidth it is determined mainly by the VCO and its drive circuitry.

Loop Bandwidth

- The Loop Filter defines the loop performance
  - Ideally set at the point where Reference and VCO noise cross over ..... BUT .....
  - Has to attenuate comparison frequency sidebands
  - Prevent External influences (microphony)
  - Determines Lockup Speed – several cycles
- Often want as high a loop BW as possible,
  - Subject to loop components themselves not contributing.
  - Filter Order, good design techniques allow 4th order filters
- Programmable Charge Pump allows post design tweaking

The Basic Integer- N Synth

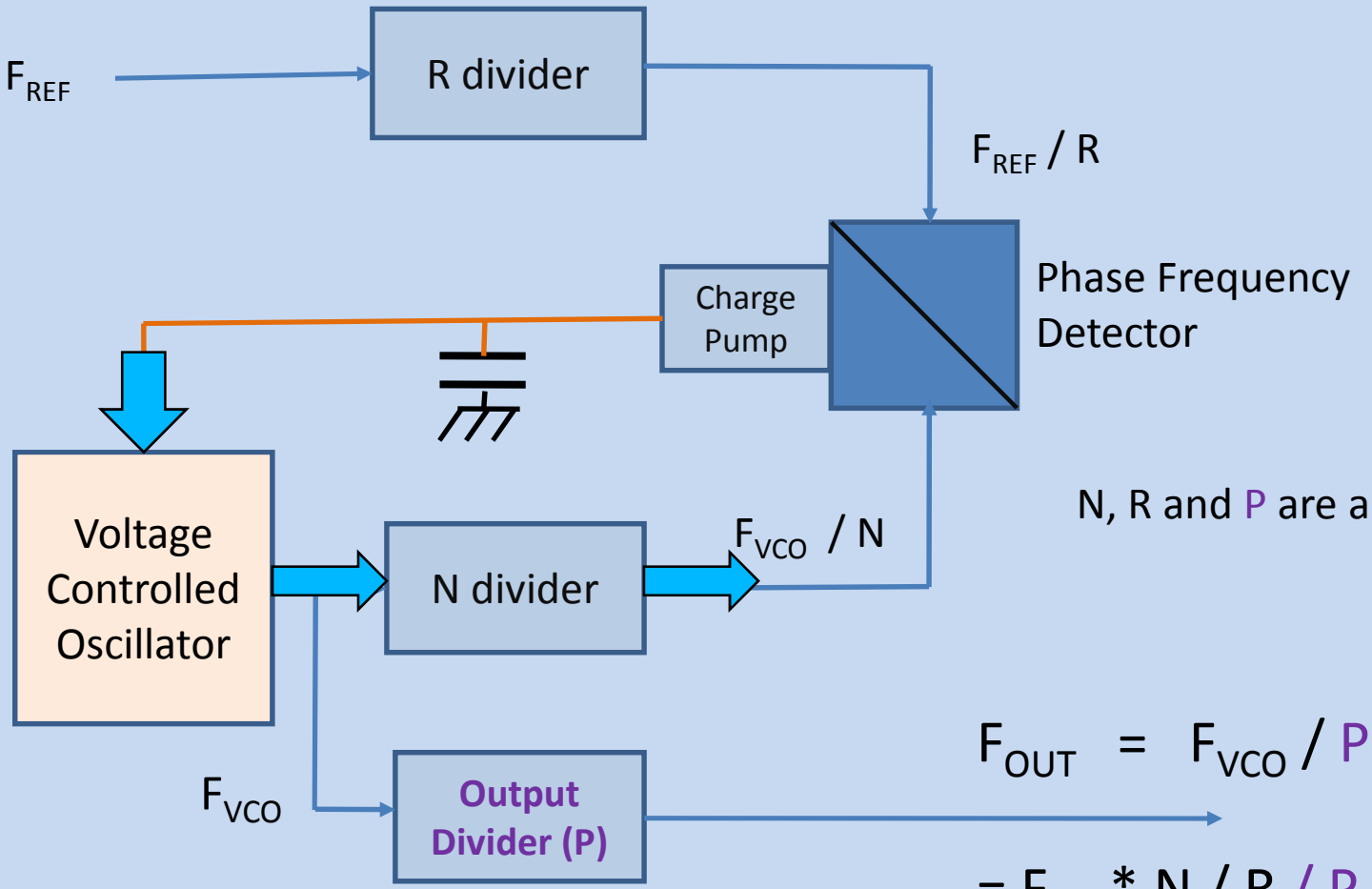

N, R and P are all Integers

$$F_{OUT} = F_{VCO} / P$$

$$= F_{REF} * N / R / P$$

Loop Filter (third order)

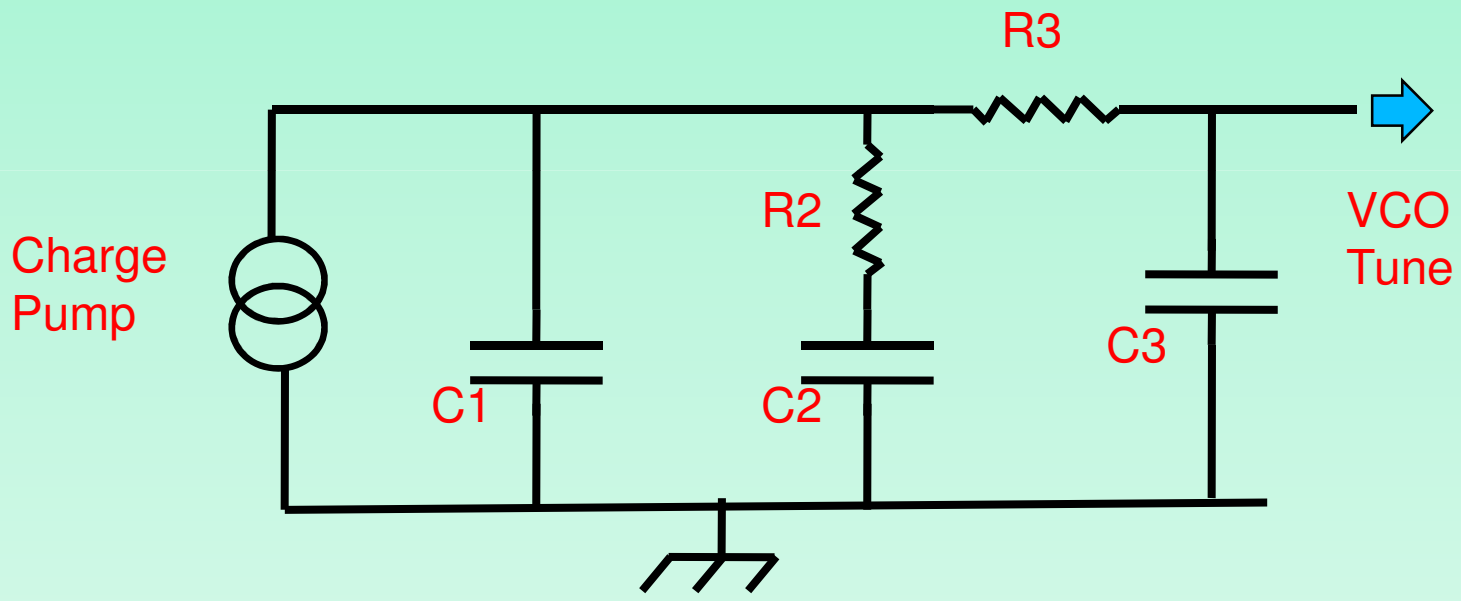

Phase Noise continued

- Far-out phase noise is mostly a strong / adjacent signal problem. <u>You need to decide how important</u> that is:
    - On Transmit: spurii, cause QRM, regulatory
    - On Receive: Strong signals, reciprocal mixing
- Close in, Phase Noise affects audibility, sounds like rumble.
    - Use a low jitter good quality reference
    - Rarely a problem with latest generation synth chips
- Output Divider reduces Phase Noise by N^2
    - So a GHz synthesizer divided down can give a good HF or VHF source

dBC/Hz

Relative amplitude of the phase noise, in a 1Hz bandwidth referenced to the carrier. Specified at a particular spacing, in Hz, from that carrier

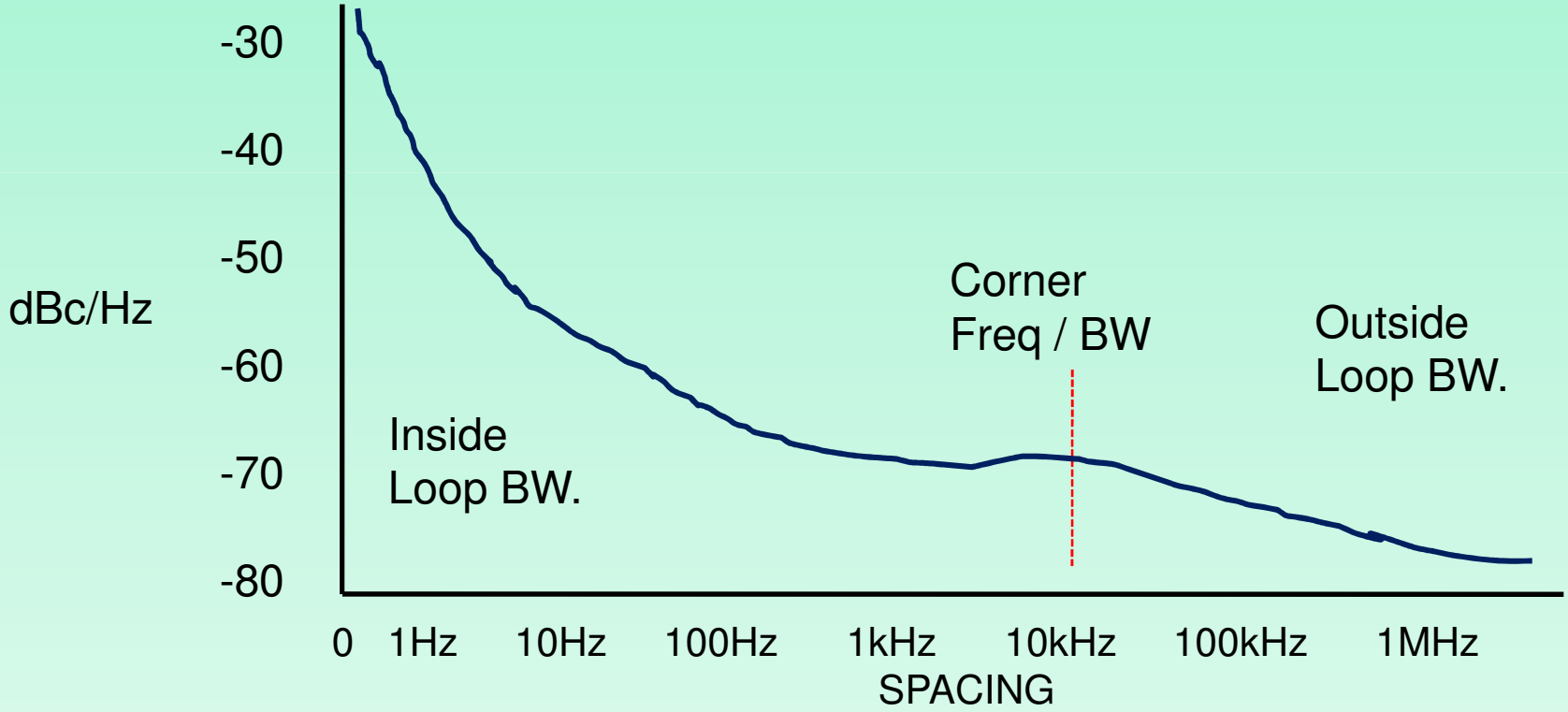

Latest Advances in Modern Devices

- Phase Frequency detectors work to many MHz
  - High F_{COMP} means high loop bandwidth
  - Improves close in phase noise
  - Programmable charge pump
- Integrated output divider
  - Gives UHF to low VHF coverage and smaller steps
- Integrated VCO on the chip
  - (GHz only, but *can* be octave coverage)

Internal VCO

- One chip Synthesizer
  - No Need for separate VCO hardware / module
    - Packaged VCOs often more expensive than the synth chip itself
  - No High tuning voltages
    - Many packaged VCOs need 20V
- BUT
  - Higher far-out Phase Noise due to lower Q silicon resonator (outside loop bandwidth)
  - Need more programming / setting up

Internal VCO

- Wide(ish) tuning range,
  - Needs several chip variants
  - Removes Tuning voltage limitation
- Auto calibration pretunes the VCO
  - Typical sensitivity 20 – 40MHz/V in spite of 100's of MHz tuning range
  - The chip has to be "told" the value of F_{REF}
  - Auto Recal <u>whether you like it or not</u> = glitches when frequency is changed (sometimes)

A Few useful Integer-N chips

- LMX 23xx, 24xx (many family members)
  - Obsolete, but the workhorse of much surplus stuff
  - 100MHz to 2.8GHz
  - F_{COMP} to 1MHz
- ADF4110/3 is pin compatible with LMX2326, and goes to 4GHz
- LTC6946 Internal VCO,
  - 3 overlapping band variants 2.2 – 5.8GHz
  - Output divider, 1 – 6, so goes down to 370MHz
  - F_{COMP} to 100MHz
- *There are lots of others out there*.

Avoid Sat-TV Type Chips such as SP6289

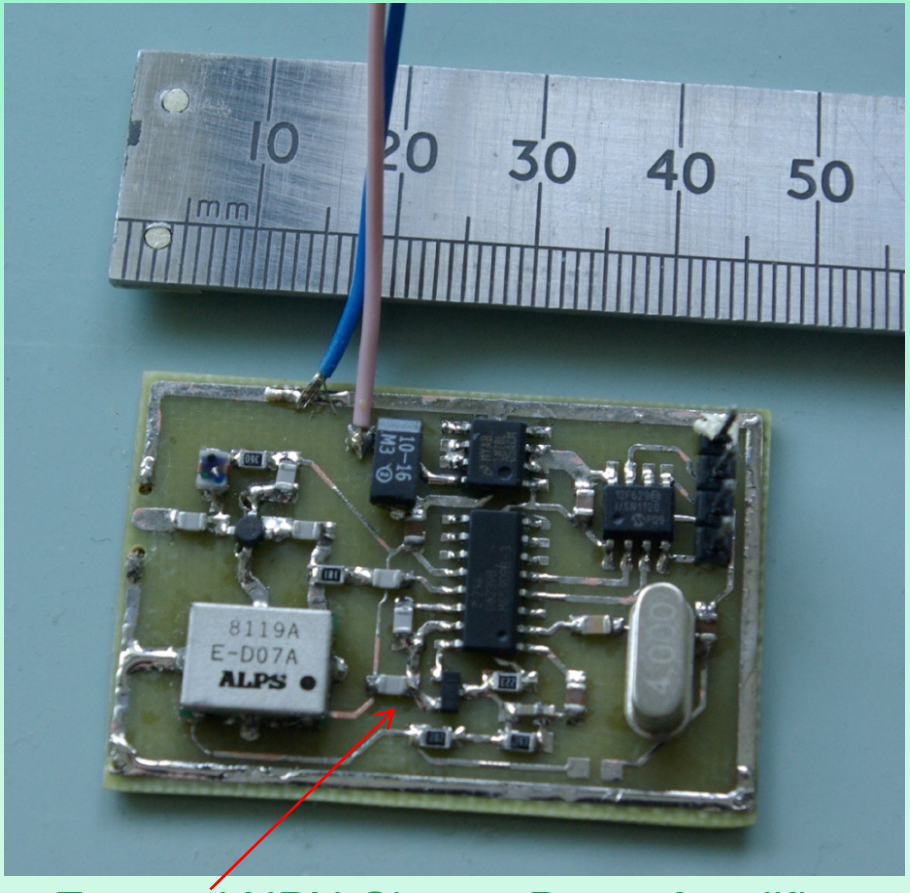

External NPN Charge Pump Amplifier allows high tuning voltage (30V)

Low F_{COMP} - fixed prescalar

Typical 8kHz

Low Loop Bandwidth (100Hz)

Large Step size (125kHz)

Poor Phase Noise

Totally and utterly useless for narrowband designs

Worth using if you can find them

LMX1501 Very Obsolete,
but OK for V/UHF.
Simple programming

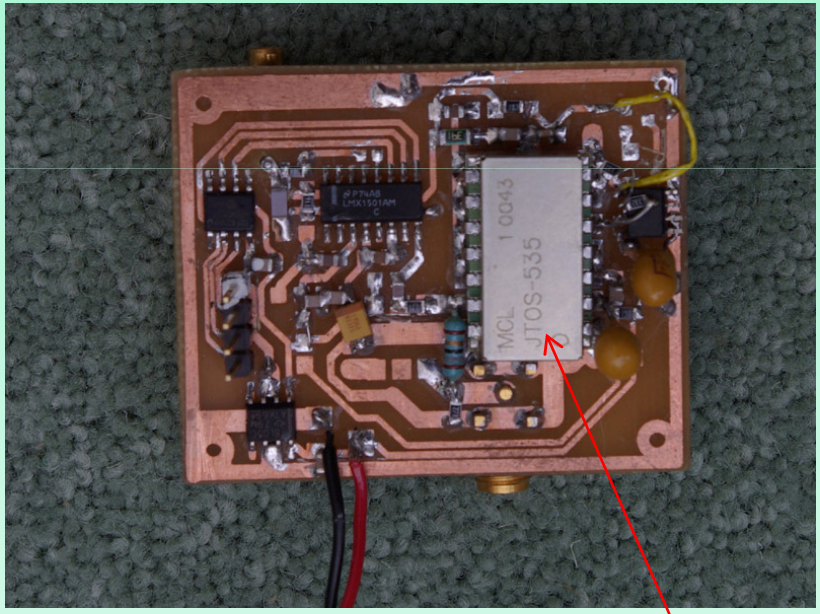

LMX2326

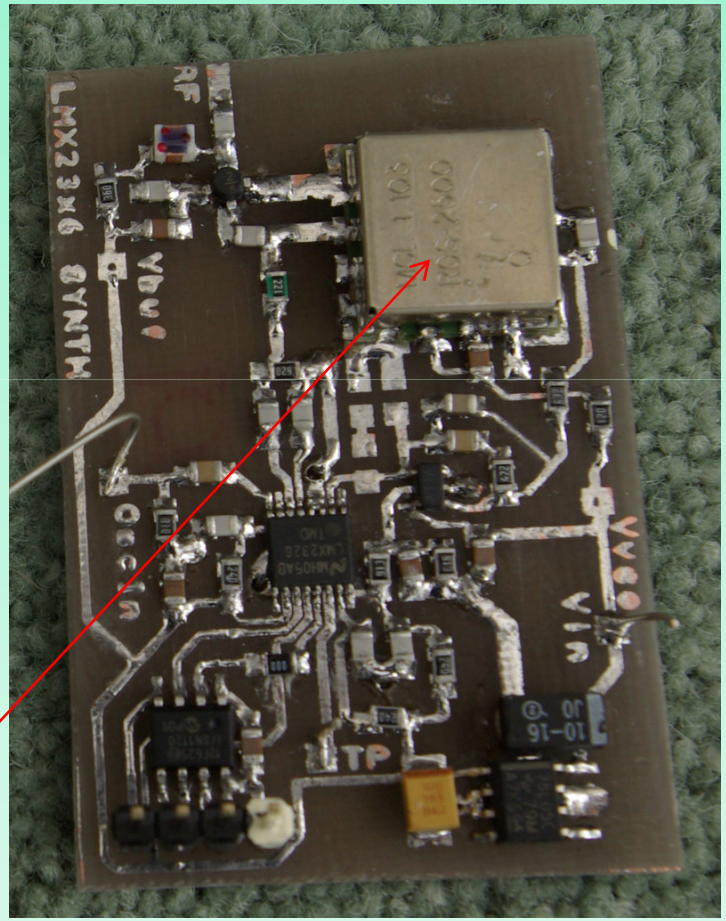

Packaged
VCOs

There are many others

LTC6946, integrated 3-6GHz VCO

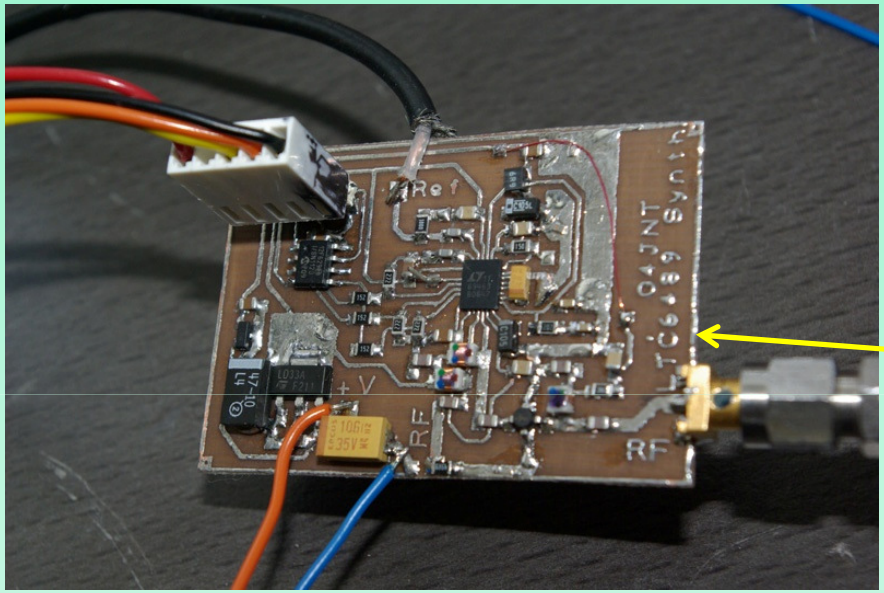

Spot the typo !

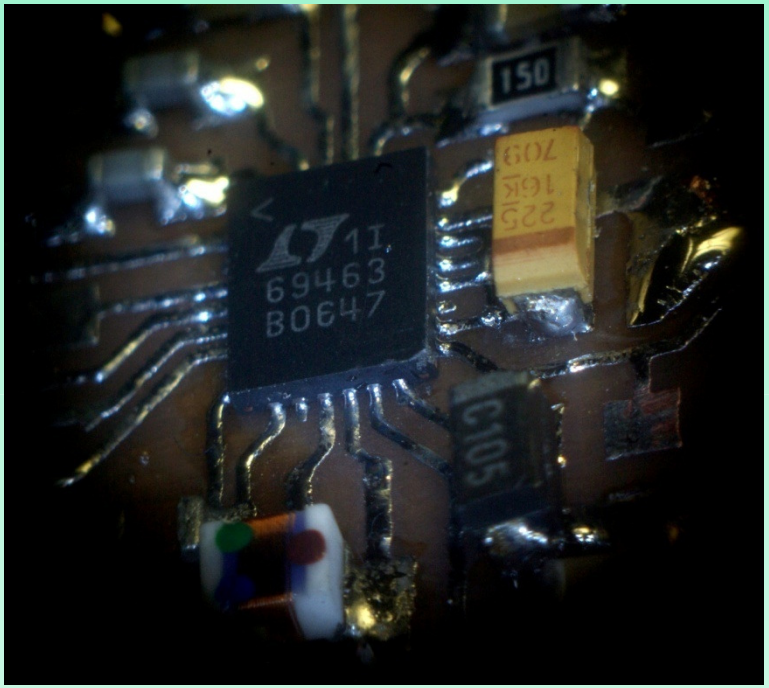

28 pin LQFP package

Home built PCB, chip installed using the solder-wipe technique with liquid flux

Used by GW4DGU in 10GHz Transverter LO

BUT

Integer-N designs still only offer a coarse frequency setting grid.

F_{COMP} / P

The Next stage - Tiny steps

- A low F_{COMP} is not feasible if we want to keep loop bandwidth as high as possible
  - 10Hz steps would need 1Hz bandwidth – 20s lockup!
- Generate high frequencies and divide down - limited use
  - Although for LF, dividing by 1000 - 10000 works.
- Divide down and mix,
  - Complicated, spurii, hardware filtering
  - Yesteryear's solution
  - Many Commercial & amateur radios used triple loop synthesizers for 10 or 1Hz steps.
- DDS + PLL multiplier: Works, but spurii can be bad.

- So Use ideas learned from DSP, Fast processing, filter out the crud !

The Fractional-N Synth

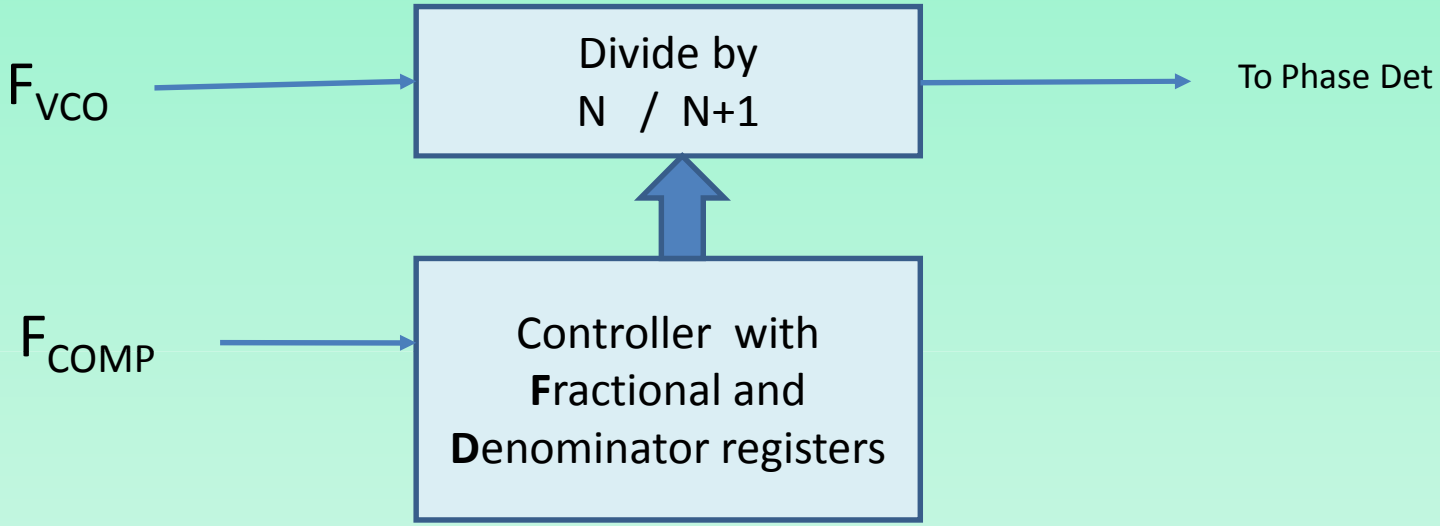

Periodically change the value of N to N+1, F times out of every D,

$$N' = N + F / D \qquad F_{OUT} = F_{COMP} * (N + F / D)$$

Fractional counter runs at F_{COMP} which can be many MHz

Tuning grid = F_{COMP} / D. Large D = small tuning steps

BUT !

With this simple route
There will be multiple SPURII at the grid spacing.

They can be controlled.
Their amplitude can be made low *enough*.
They can be made to just look like phase noise.
Usually
On a good day

‘Real’ Fractional-N Synthesizers

- Use N / N+1 / N+2 / N+3 Called “ **Sigma-Delta** “
  - Shift between them in a pseudo random way
  - Dither to spread out the spurii.
  - Do clever stuff
- All this happens inside the chip
- As well as other things the manufacturers don’t want to tell us!
- They let the users programme everything, optimising by trial and error. *Is this a cop-out?*

The Result

- A 22 Bit Denominator (4194304) gives fine steps even with R = 1, where F_{COMP} = Input Reference
  - 10MHz in
  - means step size can be 2.4Hz
  - We can define specific step sizes for Multi-Frequency data modes. Eg 5.3833Hz for JT65B *(D = 1857596)*
- High F_{COMP} means Fract-N jitter is kept low
- Loop bandwidth stays high. 20 – 100kHz typ.
- THE IDEAL SOLUTION TO EVERYTHING ?
  - Almost ----- but not quite!

Limitations

- Problems around low and max values of F,
  - Ie. Close to integer values
- Also some low small integer ratios, like 0.6666666,

- Manufacturers provide a host of user settable options.
  - Usually possible to find one that works
  - **Unless you can't**

Just a few of the Synth Chips around

Integer-N

Type No	VCO	Freq range	O/P Divider	Vcc [max] (Vph)	Availability
LMX2326	External	100 – 2800	-	5 (5)	Obsolete, found on Surplus PCBs
ADF4110 / 3	External	80 – 550 / 4000	-	5 (5)	RS £4.50 Pinout = LMX2326
ADF4118	External	100 – 3000	-	5 (5)	RS £3.20 Pinout = LMX2326
LTC6946	Internal (3)	2240 – 5790	1 – 6	3.3 & 5 dual	£12 ++ US Stock Farnell

Fractional-N

Type No	VCO	RF I/P Freq	Fract Res bits	O/P Divider	Vcc (Vph)	Availability
LMX2470	External	500 – 2600	22	-	2.5	RS £4.30
LMX2487	External	3000 – 7500	22	-	2.5 – 3.3	RS £5.30
LMX2541	Internal (6)	1990 – 4000	22	1 – 63	3.3 (3.3)	Digikey / Mouser ~$10
ADF4150	External	500 – 5000	12	1,2,4,8,16	3.3 (5)	Farnell £5.40
ADF4150HV	External	500 – 3000	12	1,2,4,8,16	3.3 (30)	Farnell £6.20
ADF4156	External	500 – 6200	12	-	3.0 (5)	RS / Farnell £5.30
ADF4159	External	500 – 13000	25	-	1.8 & 3.0 (3)	
ADF4351	Internal	2200 – 4400 (full octave)	12	2^N to 64	3.3 (3.3)	Digikey ~$10
LMX2492	External	500 - 14000	24	-	3.3 (5)	Manuf, (Free samples)

A Few Spectral plots.

Downconverted using overtone crystal oscillator LOs and SDR-IQ.

Good quality 10MHz TCXO is the reference – unknown phase noise

FractN Spurii at 432MHz
Third and Fourth order Sigma-Delta

Note...
20dB/div.

Sidebands -70dBc

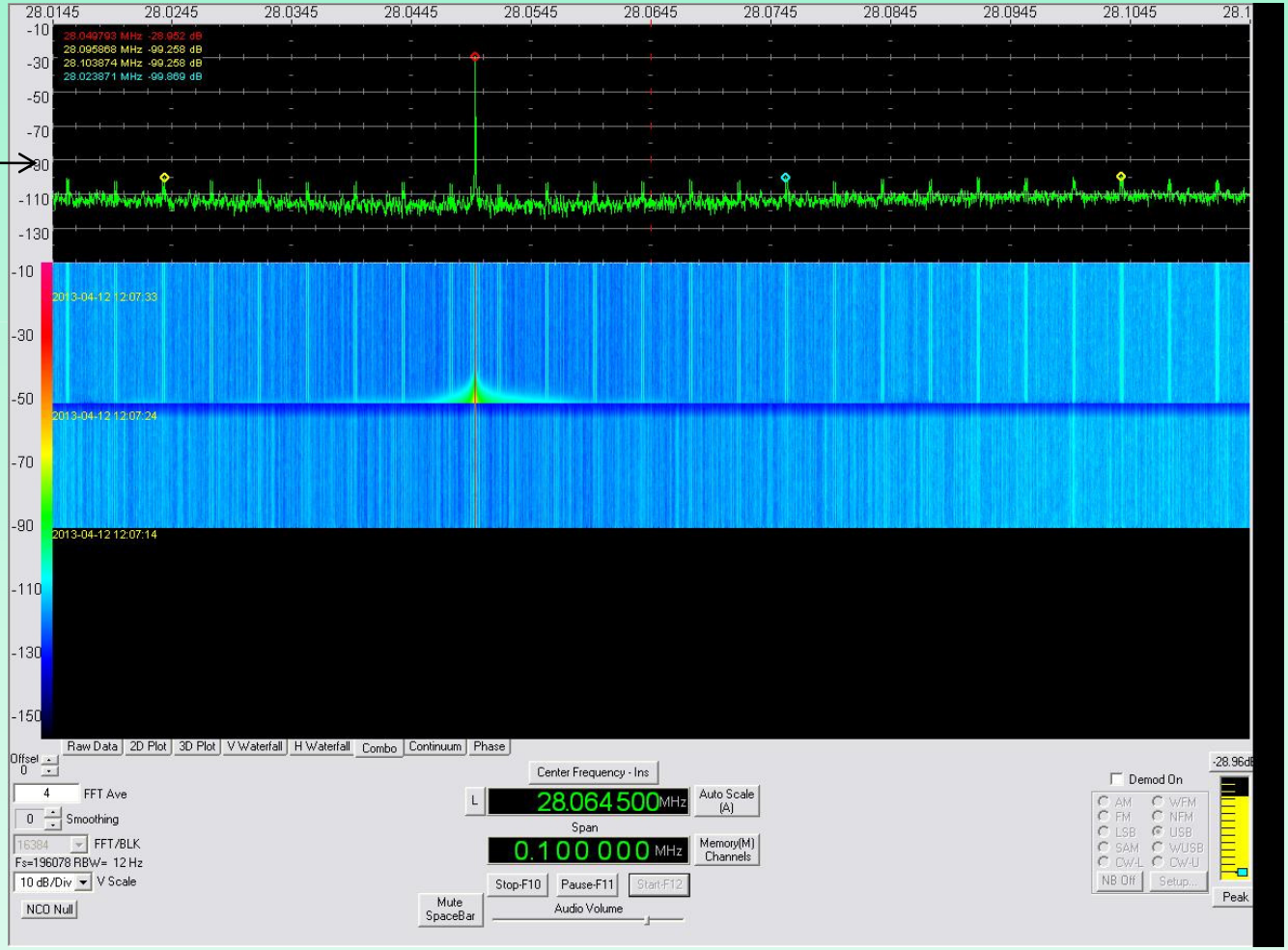

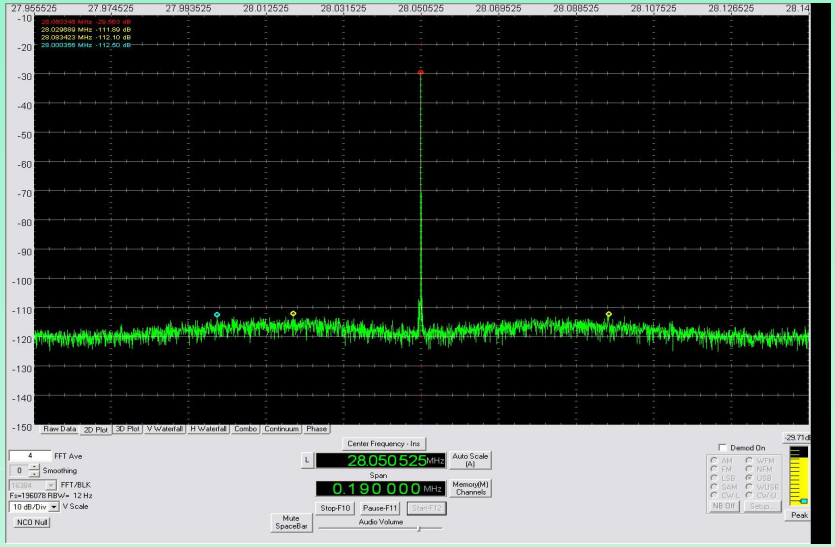

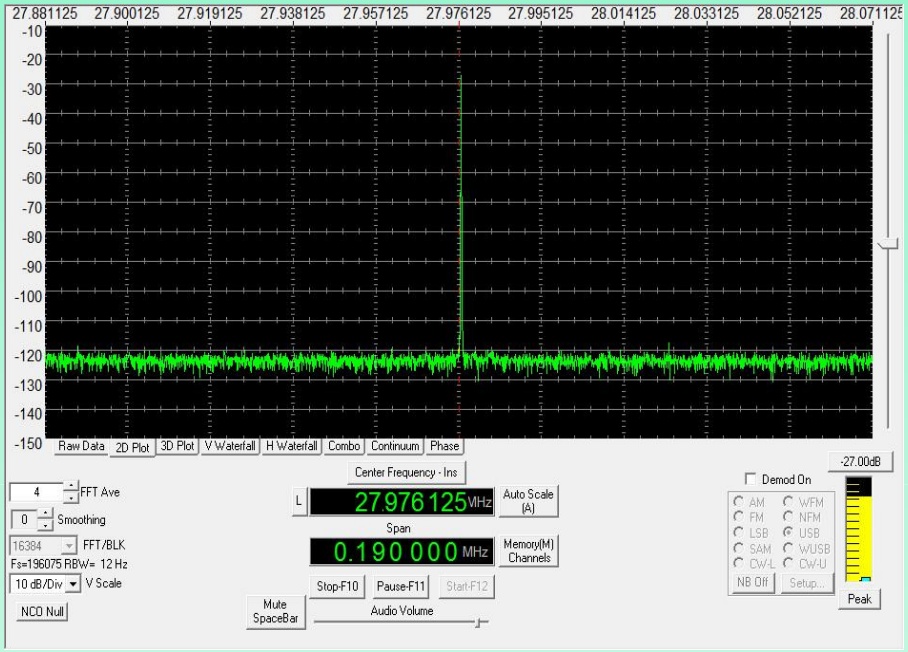

432MHz
(2.6GHz /6 OP Divider)

Compare with 432MHz
from a crystal source

Both plots noise B/W = 12Hz.
dBc/Hz is 11dB Lower

1296.2MHz (5Hz step resolution)
(Wide 80kHz loop bandwidth)

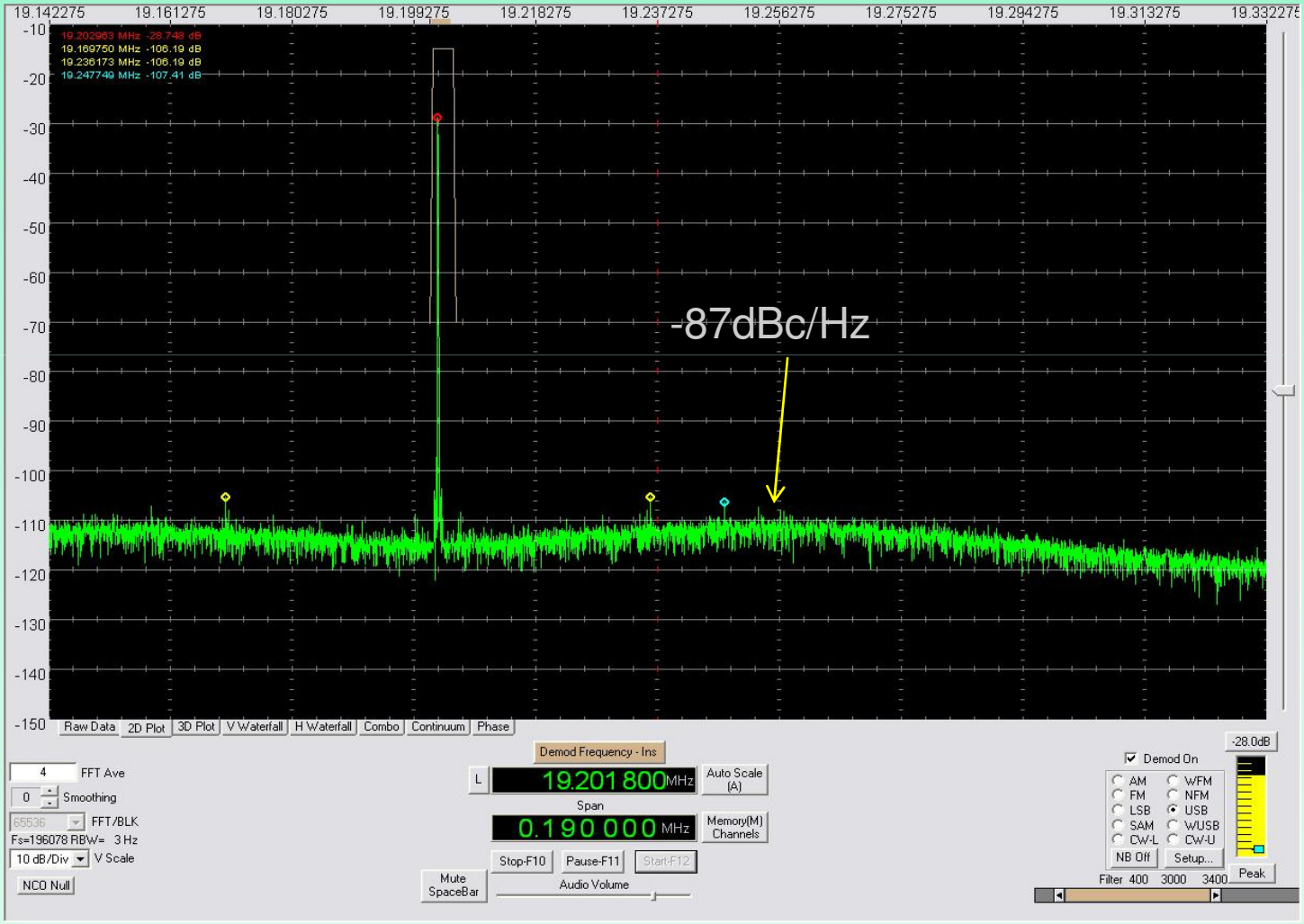

5760MHz (LMX2541, 2.88GHz + Doubler)

Loop filter 30kHz BW

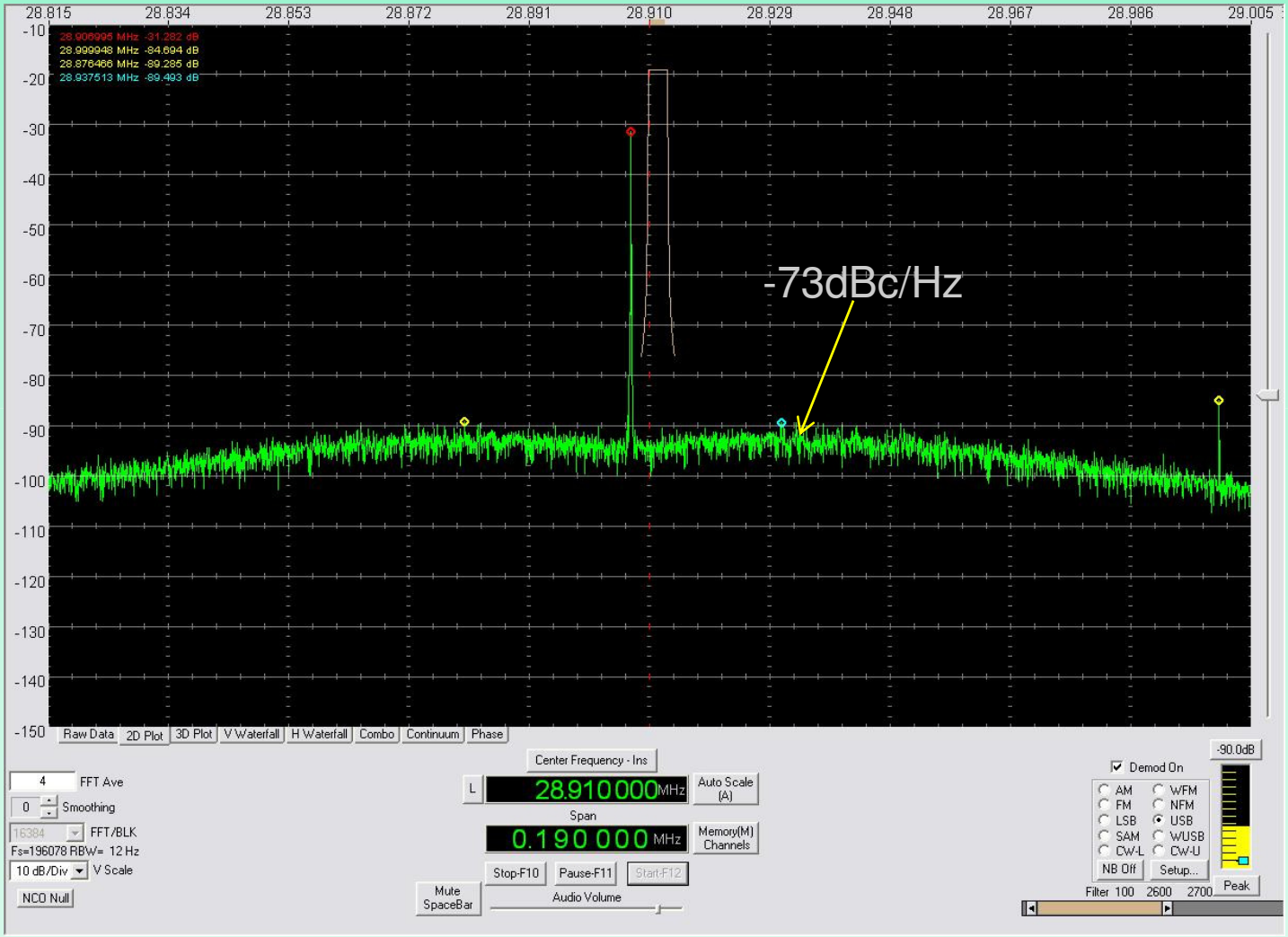

144MHz Close in (1.5Hz noise B/W)

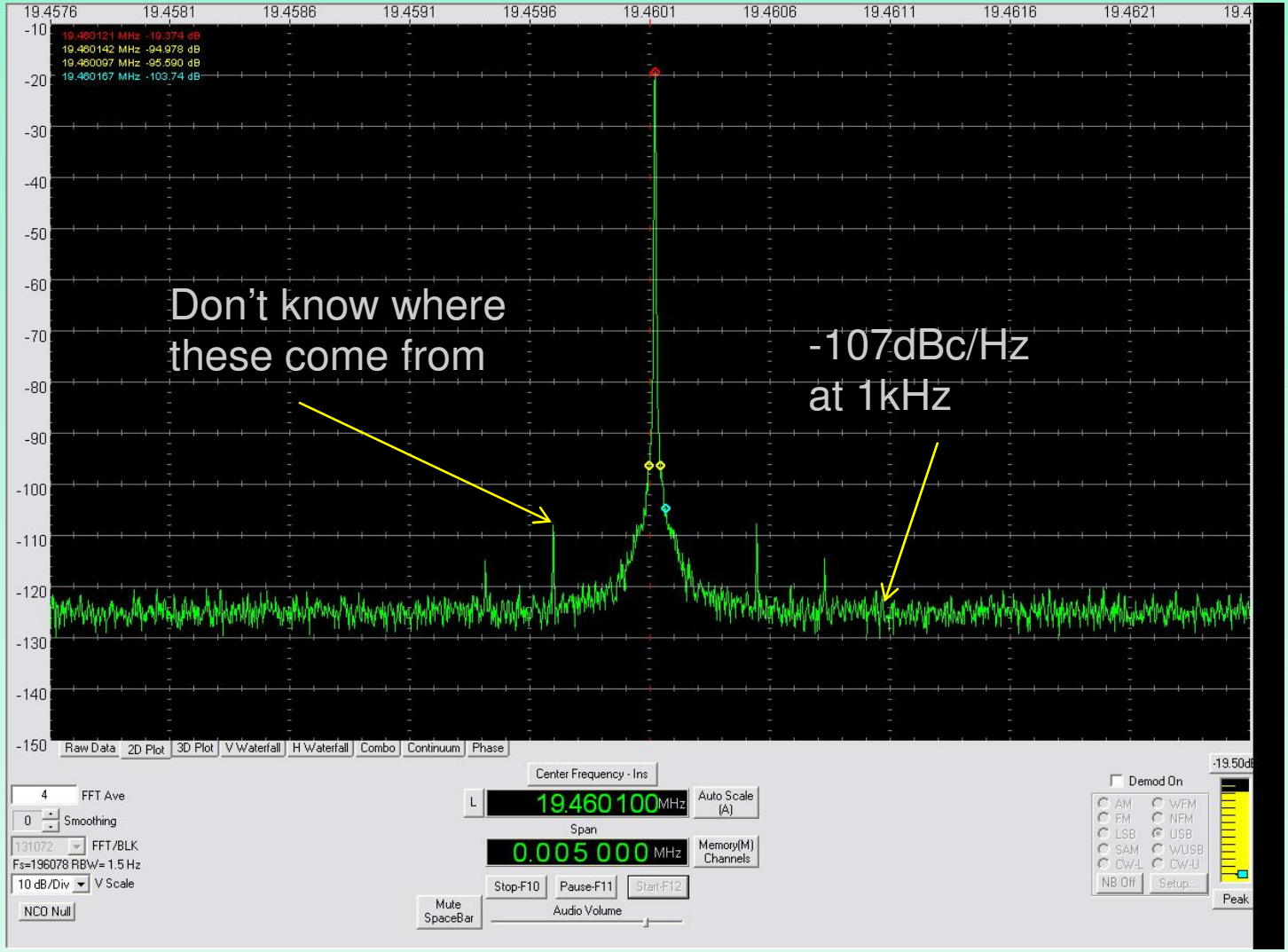

Found by accident , an unfortunate choice of F/D ratio.
1296.67MHz 80kHz loop bandwidth

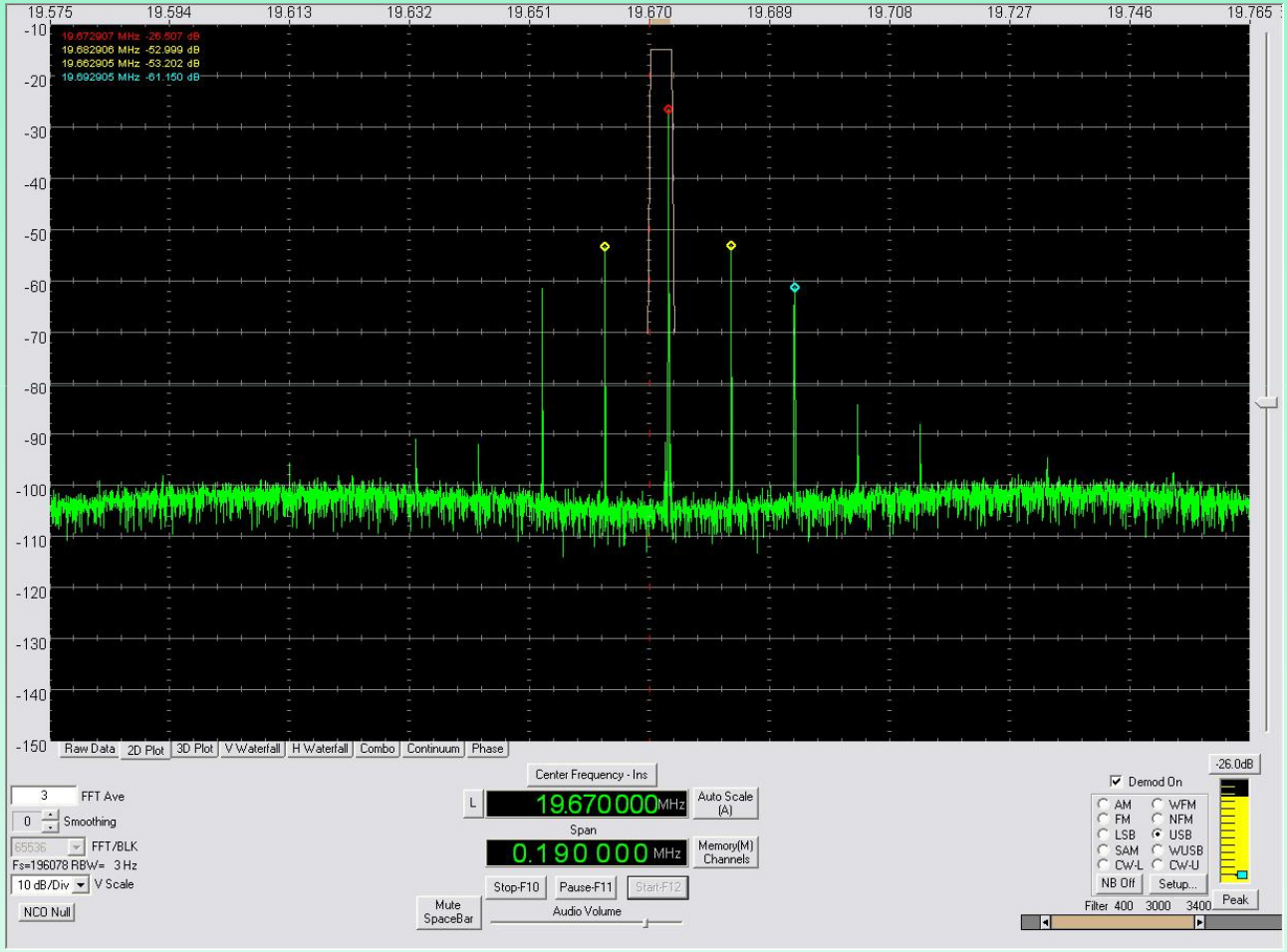

A convenient point to end if time is short.

If not...

A Few Practical Designs

Practical Designs

- External VCO
  - LMX2470 up to 2.5GHz
  - LMX2487 up to 6GHz (both 22 bit D)

  - ADF4150, 5GHz
    - 12 Bit Denominator (medium size steps)
    - Output divider /2 , /4 , /8 , /16
  - Lower VCO limit for all these is 500MHz

Tuning Voltage Limits

- Charge Pump Vdd (or a rail not much higher)
  - 3 to 5V is typical
  - Except the ADF4150HV 30V Why did they use the same type number ?
- External OPAMP / active filter
- LM6211 is designed for the job
  - 5 pin
  - 20MHz bandwidth
  - Rail to Rail

Loop Filter

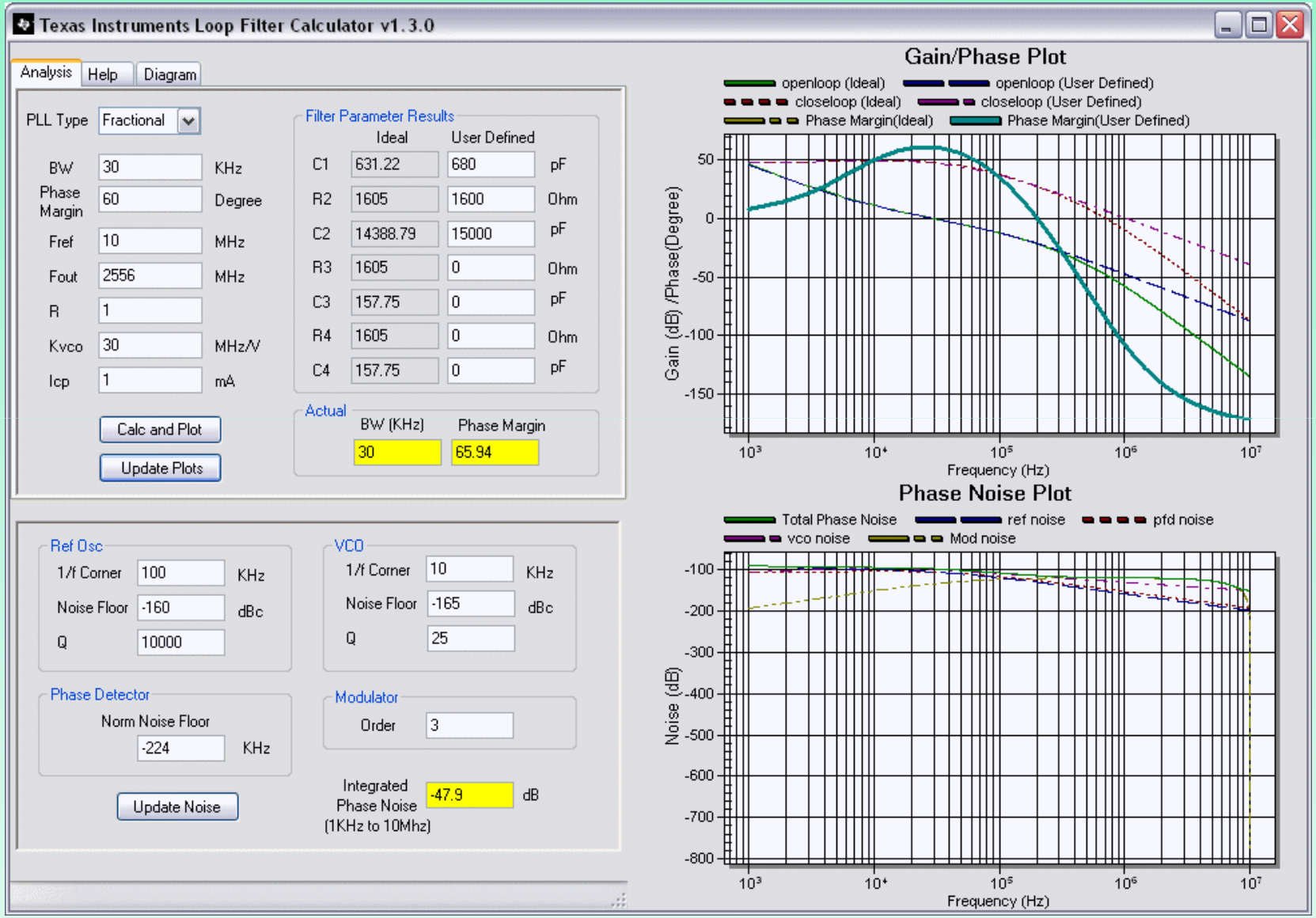
Texas Instruments Loop Filter Calculator v1.3.0
Analysis
Help
Diagram
PLL Type
Fractional
BW
30
KHz
Phase Margin
60
Degree
Fref
10
MHz
Fout
2556
MHz
R
1
Kvco
30
MHz/V
Icp
1
mA
Calc and Plot
Update Plots
Filter Parameter Results
Ideal
User Defined
C1 631.22 680 pF
R2 1605 1600 Ohm
C2 14388.79 15000 pF
R3 1605 0 Ohm
C3 157.75 0 pF
R4 1605 0 Ohm
C4 157.75 0 pF
Actual
BW (KHz)
Phase Margin
30
65.94
Ref Osc
1/f Corner 100 KHz
Noise Floor -160 dBc
Q 10000
VCO
1/f Corner 10 KHz
Noise Floor -165 dBc
Q 25
Phase Detector
Norm Noise Floor
-224 KHz
Modulator
Order 3
Update Noise
Integrated Phase Noise (1KHz to 10Mhz)
-47.9 dB
Gain/Phase Plot
openloop (Ideal)
openloop (User Defined)
closeloop (Ideal)
closeloop (User Defined)
Phase Margin(Ideal)
Phase Margin(User Defined)
Gain (dB) /Phase(Degree)
Frequency (Hz)
Phase Noise Plot
Total Phase Noise
ref noise
pfd noise
vco noise
Mod noise
Noise (dB)
Frequency (Hz)

Practical Hardware - LMX2470

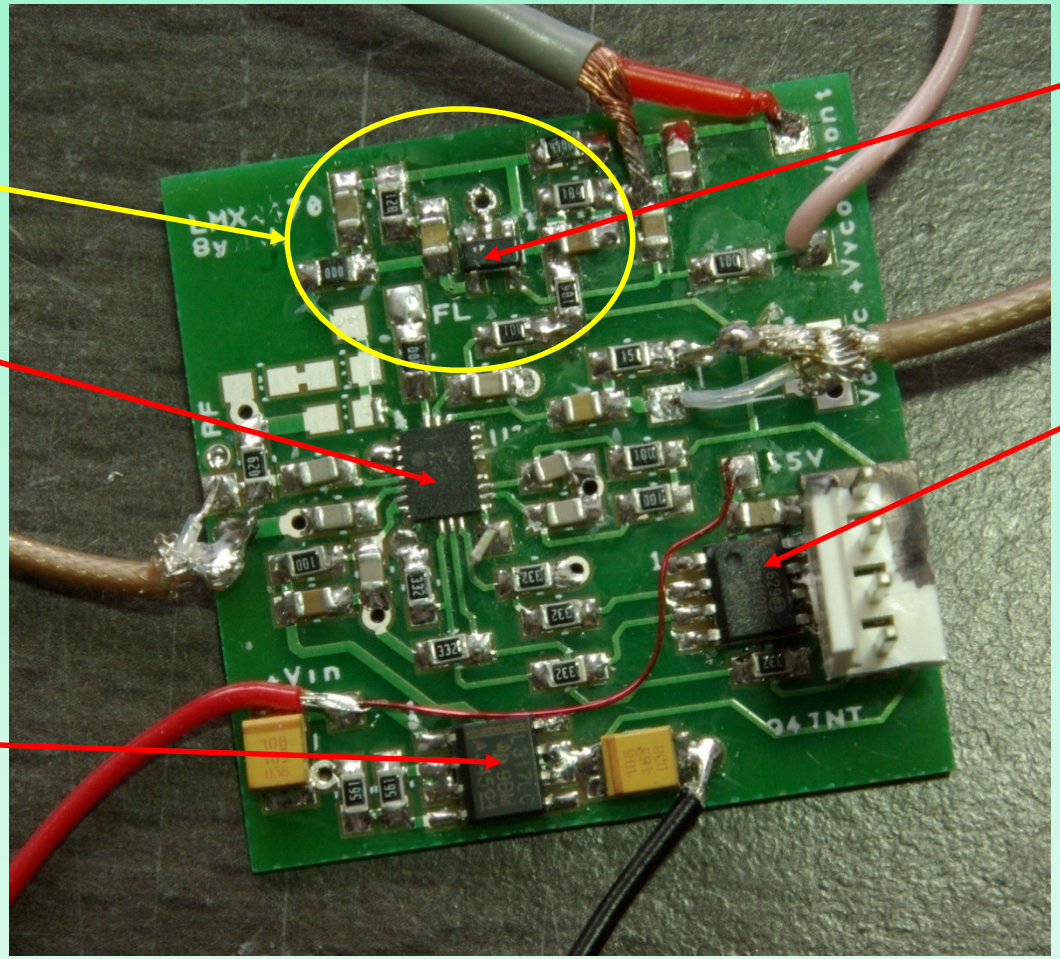

It’s easy with an Internal VCO!

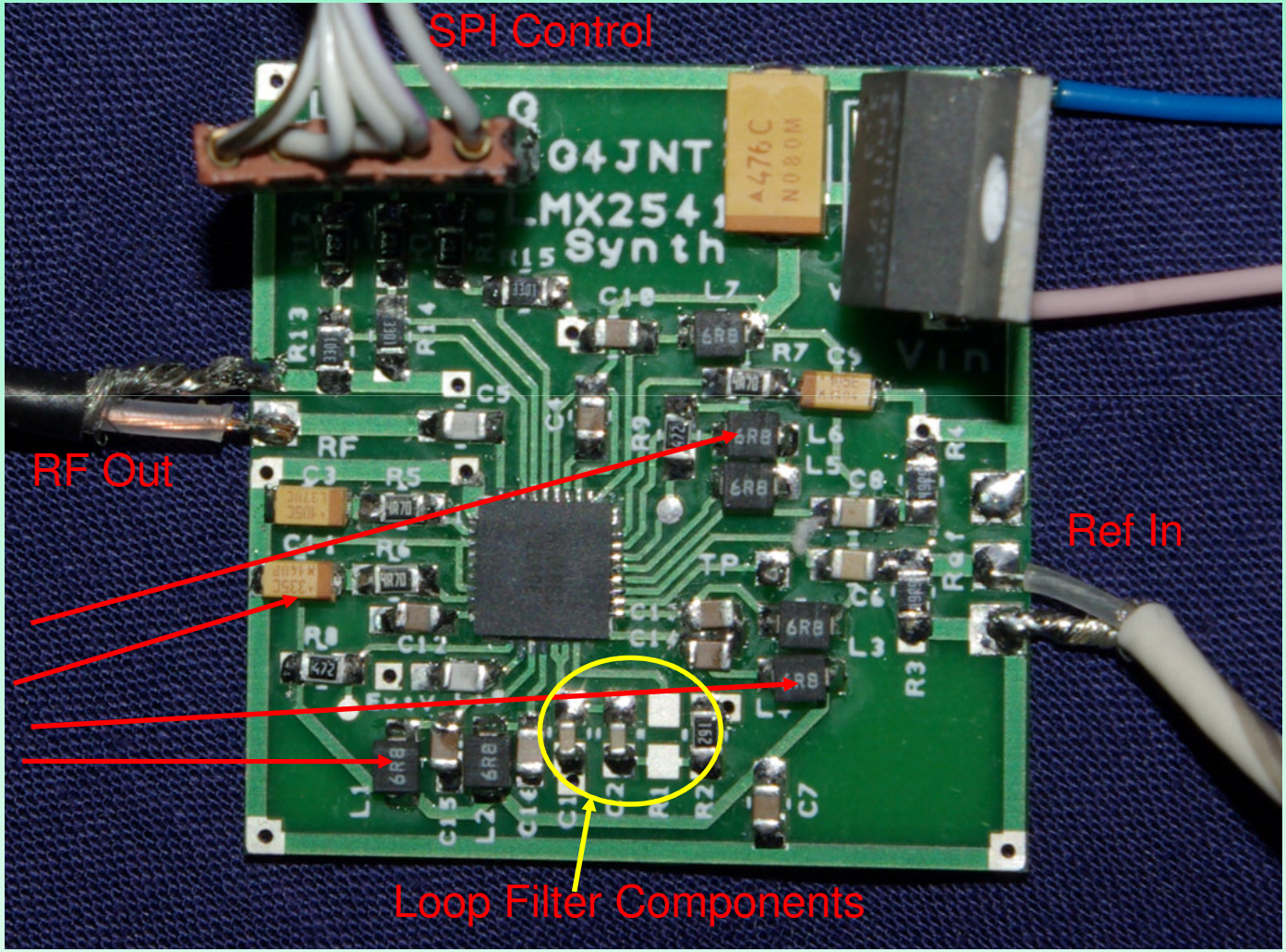

Lots of Decoupling

But not much else

RS232 Control

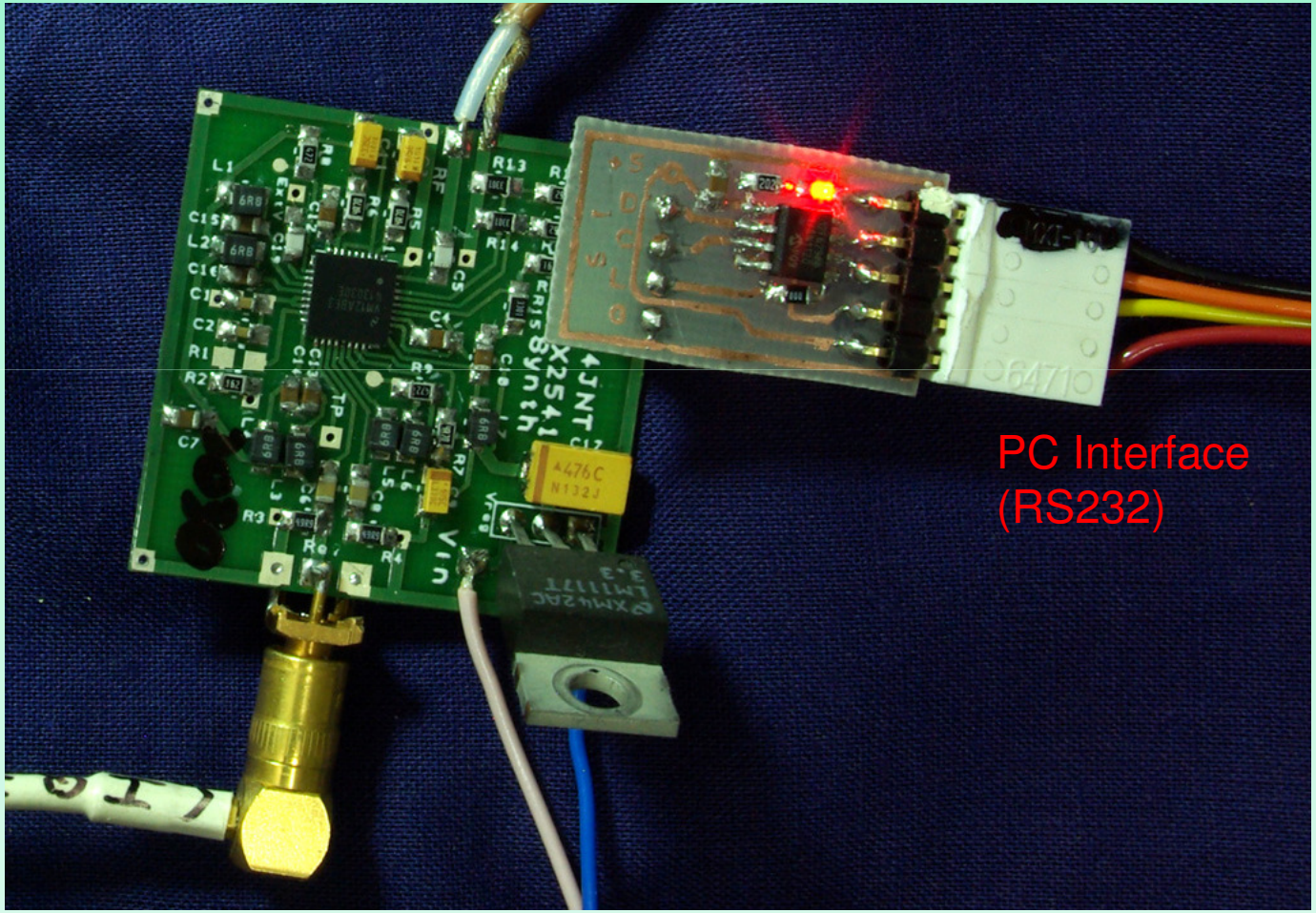

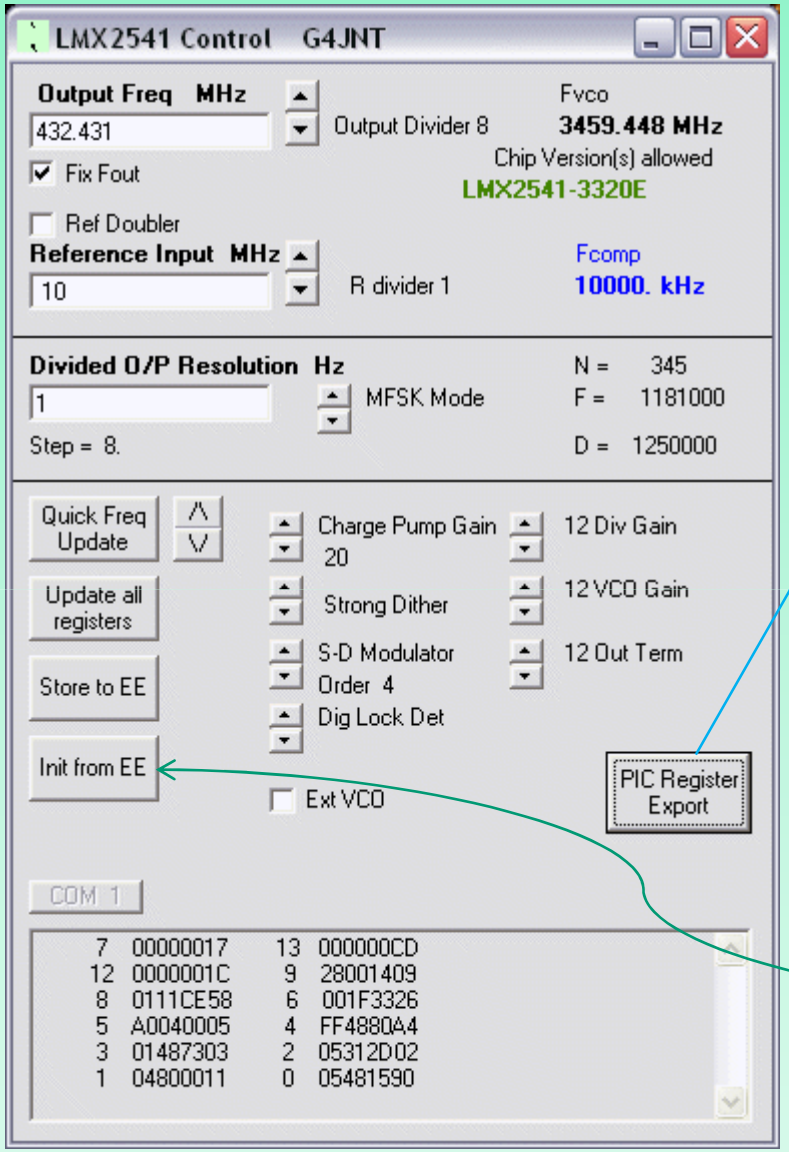

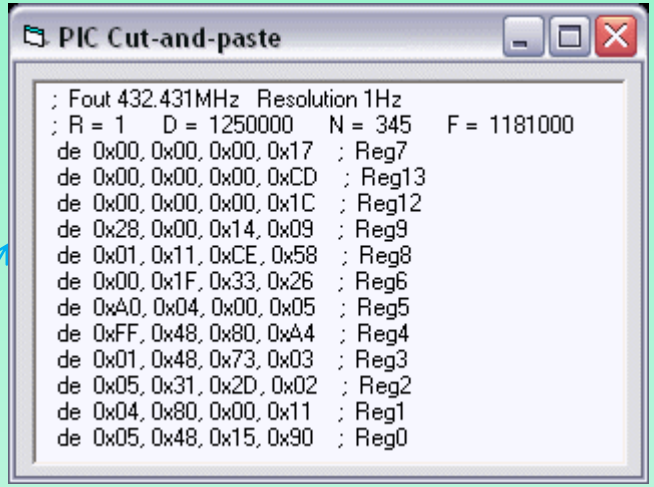

Software calculates register contents, then can send RS232 data and stores in the PIC for boot up.

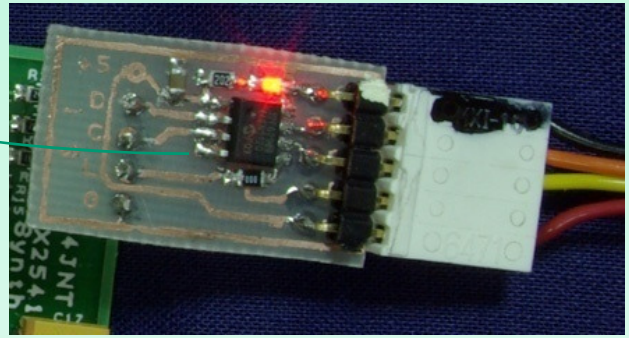

Rotary Control / LCD